sinopé

Calypso

Smart Water Heater Controller V2

Installation guide

RM3510WF



660-0339-0001/12112026

Table of contents

Table of contents **2**
Included in the box **3**
Tools required **3**
Your Calypso Water Heater Controller **4**
Technical specifications **5**
Installation of your controller **5**
Installing your water controller on a water heater 6
Installing the AC3500-01 temperature probe 9
Installing the optional AC4200-02 water detection cable 11
Wi-Fi Connection **12**
Configuration with the Sinopé app 12
Settings 13
Configuration 13
Setting Up with Apple Home 14
LED indicators status **15**
Load 15
Connection 15
DR events 16
Other 16
Removing your water heater controller from the Sinopé app **17**
Disconnecting your water heater controller from the Wi-Fi router **17**
Troubleshooting and support **18**
3-year Limited Warranty **19**
ISED Canada compliance statement 20
FCC compliance statement 20

Included in the box

Inside the box, you will find:



RM3510WF Water Heater Controller
2 x ½ in. zinc-alloy connectors



AC3500-01
temperature sensor



Alcohol pad

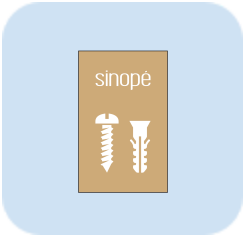

2 screws
2 anchors



Welcome guide

Tools required



Square (Robertson) or flathead
screwdriver



Wire stripper



Pliers (optional)

Your Calypso Water Heater Controller



1 **Link Indicator / Button**

The indicator lights up when the controller is connected to the network.

2 **Power Indicator / Button**

The indicator lights up when power is applied to the water heater.

3 **Temperature Probe Port**

This temperature sensor guarantees maximum comfort and a minimum temperature threshold during your power utility's peak management events and your programmed events.*

4 **Water Detection Cable Port**

The optional water detection cable detects potential leaks and sends an alert to your mobile.

* Neviweb account and Éco Sinopé participation required.

Link Indicator / Button — The indicator lights up when the controller is connected to the network.

Power Indicator / Button — The indicator lights up when power is applied to the water heater.

Temperature Probe Port — This temperature sensor ensures maximum comfort while maintaining a minimum temperature threshold during your power utility's peak management events and your programmed events.*

Water Detection Cable Port — The optional water detection cable detects potential leaks and sends an alert to your mobile.

* Sinopé app account and Éco Sinopé participation required.

Technical specifications

Maximum wire gauge	10 AWG
Conductor type	Copper only
Operating voltage	120/208/240 Vac, 60 Hz
Maximum load	20.8 A @ 240 V 20.8 A @ 120 V
Operating temperature	0 °C to 40 °C (32 °F to 104 °F)
Storage	-20 °C to 50 °C (-4 °F to 122 °F)
Installation	Indoor installation only.
Commutation	Single-pole latching relay
Dimensions (W x H x D) RM3510WF water heater controller	149.2 mm (5.87 in) x 91.3 mm (3.59 in) x 47.3 mm (1.86 in)
Communication	Protocol: Wi-Fi Standard: IEEE 802.11 b/g/n/ax Frequency: 2.4 GHz Encryption key: WPA2
Communication module	IC: 21098-ESPC6WROOM1 FCC ID: 2AC7Z-ESPC6WROOM321
Certifications	Conforms to ANSI/UL Std. 916 Certified under CAN/CSA Std. C22.2 No205 FCC CFR 47 Title 15 Class B CAN ICES-3(B)/NMB-3(B)
Warranty	3 years

⚠️ **Important note**

If your water heater has been off for several days, wait until the water temperature reaches 55 °C (131 °F) and has been at that temperature for at least 4 hours. Then, let the hot water run for a few minutes before using it.

Installation of your controller

⚠️ Warnings

The installation of this water heater controller must be performed by a **certified electrician** and comply with the national and local electrical codes and regulations.

IMPORTANT: Use only copper conductors when wiring this device. Aluminum conductors are not compatible.

The Smart Water Heater Controller is designed for **indoor use only**.

Installing your water controller on a water heater

Note
You can install your water heater controller vertically or horizontally.

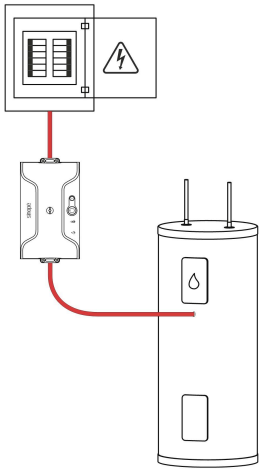

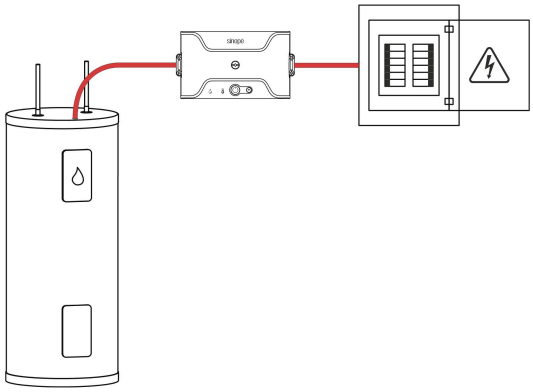

1 **Turn off the power.**
Before starting installation, turn off the water heater circuit at the electrical panel to avoid the risk of electrical shock.

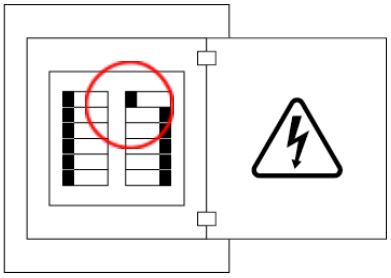

2 **Unlock and remove** the front cover of your water heater controller.

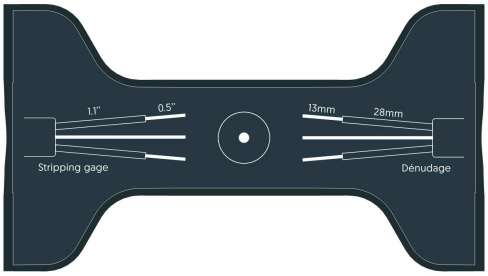

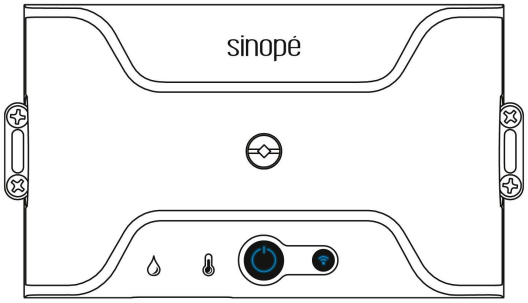

3

Cut and strip the wires as needed, following the dimensions shown inside the controller cover.

Mount the controller to the wall.

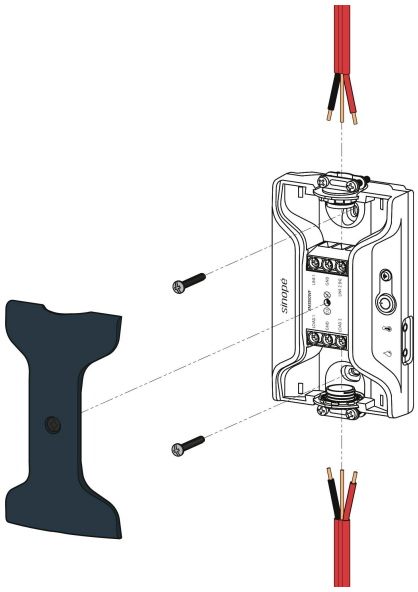

4

Insert the water heater wire (load) and the power wire (line) into their terminal blocks and **tighten them firmly** for a secure connection.

⚠️ A poorly secured connection may present a **fire hazard**.

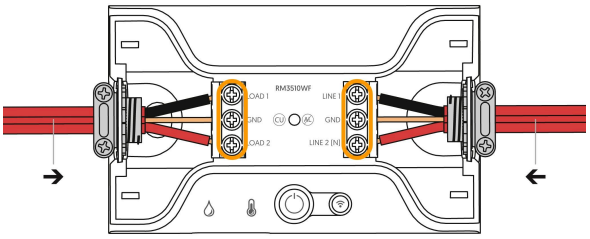

5

Secure the cables using the **cable clamps**.

Tighten the clamps over the **cable's outer insulation**.

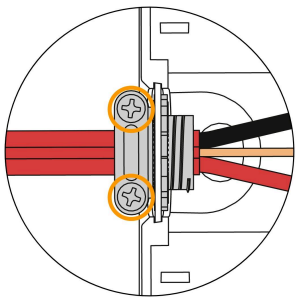

6

Replace the cover.

Replace the controller cover and secure it with the screws.

Installing the AC3500-01 temperature probe

1 **Unscrew and remove the access panel** located at the top of the water heater.

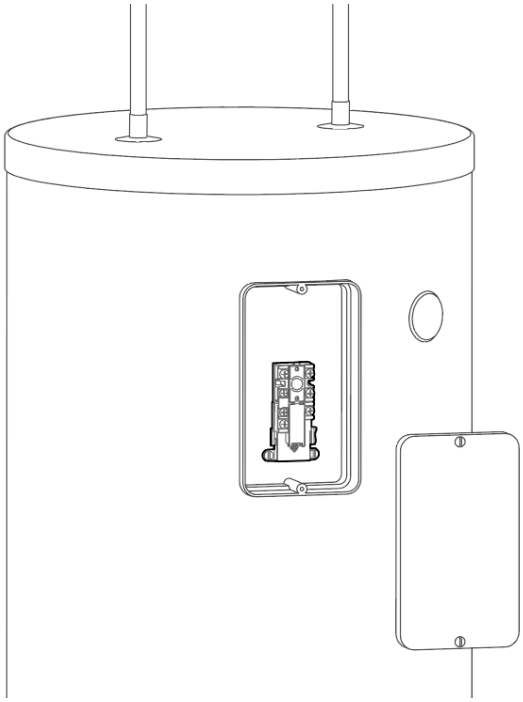

2 **Insert the temperature probe** into the controller's dedicated port.

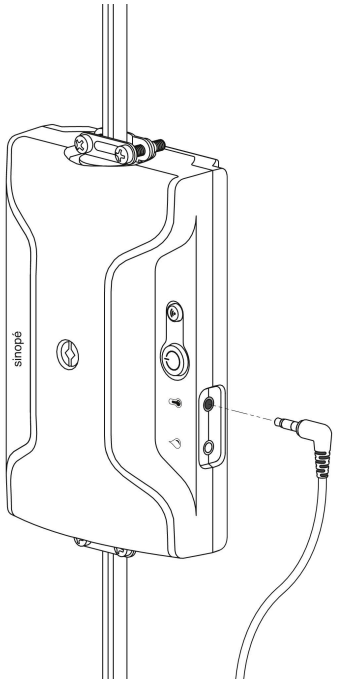

3 **Remove the adhesive liner** from the end of the probe and **affix it** to either side of the water heater's thermostat, as illustrated.

A

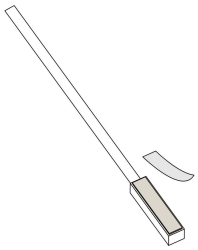

B

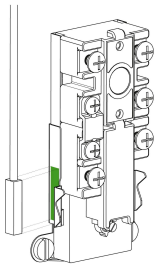

C

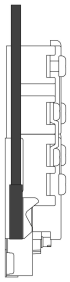

Note: Clean the side of the thermostat using isopropyl alcohol before affixing the probe.

4 Set the water heater temperature between 55°C (131°F) and 60°C (140°F) to enable the controller during your utility's peak demand periods.

5 **Reinstall the access panel.**
Replace the insulation, then reinstall the water heater access panel and secure it with the screws.

6 **Restore power.**
Turn the circuit breaker back to the ON position to supply power to the water heater and controller.

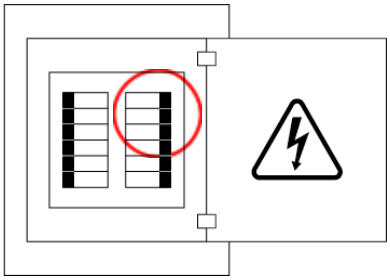

Press the “**Power**” button to activate the controller.



Installing the optional AC4200-02 water detection cable

You can add a water detection cable to the water heater controller to receive an alert when it detects a leak.

1 Plug the water detection cable into the controller’s water detection cable port.

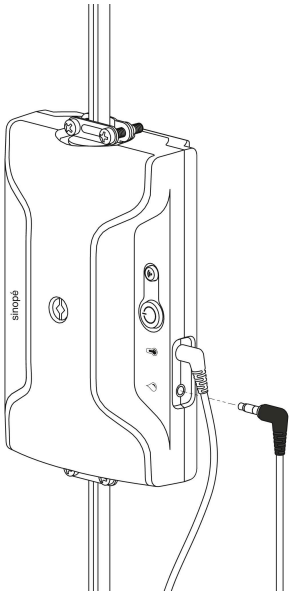

2 Position the water detection cable at the base of the water heater and secure its position with the provided fasteners.

Wi-Fi Connection

You can connect your water heater controller to Wi-Fi in two ways:

- Using the Sinopé app (recommended)
- Using Apple Home

The Sinopé app allows you to easily configure all your controller settings from your smartphone.

You can also add your device to Apple Home afterward.

Configuration with the Sinopé app

The Sinopé app lets you access all the features of your smart water heater controller.

1. If you don't have an account yet, download the Sinopé app on your smartphone to complete the setup of your water heater controller.







Get the app

2. Tap ☰, then select “Add Device.”
3. Follow the steps in the installation wizard.

Configuring Settings

Tap the Settings (⚙) icon to access the device settings. Continue configuring your system preferences in the various configuration menus.



Settings

Configuration

Default value in **bold**.

Settings	Description	Options
Tank size	Allows you to select the size of the hot water tank.	**Not defined** 40 Gal 50 Gal 60 Gal 80 Gal
Low water temperature protection	Your RM3510WF will restart your water heater if the water temperature reported by the sensor matches the minimum temperature threshold you have selected.	**45 °C** 46 °C 47 °C 48 °C 49 °C 50 °C 51 °C 52 °C 53 °C 54 °C 55 °C OFF
Load connected (watts)	The wattage featured in the field corresponds to the electrical load connected to the device. This value is automatically read and is used to assess energy consumption.	

Setting Up with Apple Home

To add your controller to the Apple Home app, follow the steps below.

1

Press the button

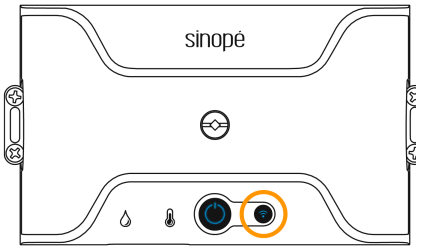

2

Add your controller to Apple Home.

Open the **Apple Home** app, then tap "**Add Accessory**."

Scan the **Apple Home setup code** located on the side of the controller or in the Welcome Guide.



Follow the instructions in the Apple Home app to complete the setup.

3

Important recommendation

If you haven't already added your controller to the Sinopé app, we recommend doing so to access all its features.

The Sinopé app allows you to:

- Easily configure all controller settings from your smartphone.
- Access **additional advanced features.**

Simply follow the steps in the "**Configuration with the Sinopé App**" section to get started.

LED indicators status

Load

Status	Power	Link Indicator
Load is ON	Blue	N/A
Load is OFF	N/A	N/A
Startup	Solid white – 4 seconds	Solid white – 4 seconds

Connection

Status	Power	Link Indicator
Opening Access Point (Connecting)	N/A	Slow-pulsing blue
Wi-Fi Connection – Successful	N/A	Solid blue
Wi-Fi Connection – Failed or Timed Out	N/A	Pulsing red – 10 seconds
Wi-Fi Connection – Unable to connect to server	N/A	Solid red

Status	Power	Link Indicator
(previously connected)		

DR events

Status	Power	Link Indicator
Active DR Event	Slow pulsing green	N/A

Other

Status	Power	Link Indicator
High-Temperature Protection active (Thermal cut-off, product OFF)	Pulsing Red	N/A
Manual OFF attempt during active protection	Red – 3 flashes	N/A
HomeKit Identification	N/A	Pulsing white – 500 ms
Overcurrent Protection	Flashes Red (1 sec ON / 1 sec OFF)	N/A

Removing your water heater controller from the Sinopé app

To remove your water heater controller from the Sinopé app, press "**Delete** in the water heater controller settings.

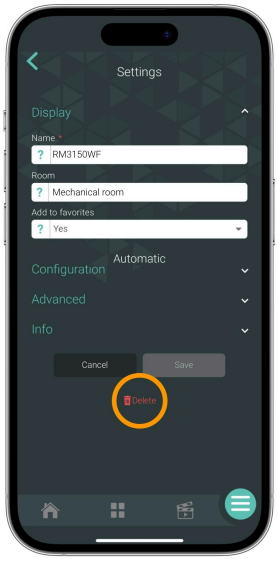

Disconnecting your water heater controller from the Wi-Fi router

To disconnect your water heater controller from the Wi-Fi router, press and hold the button for 10 seconds. The LED will turn red for 3 seconds.

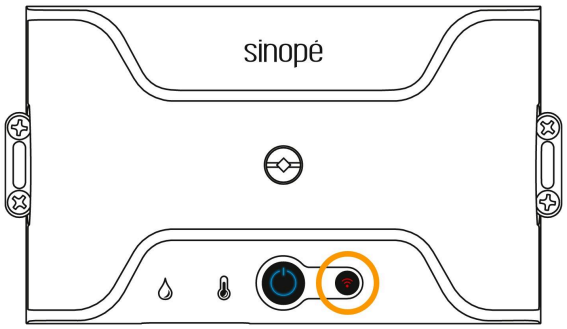

10 sec.

Troubleshooting and support

If you encounter any difficulties installing or using your device, the Sinopé app, or connecting to third-party platforms, our support team is here to help.

Online support

Visit our **Help Center** for troubleshooting guides, installation instructions, FAQs, and other helpful resources:
support.sinopetech.com/en

If you can't find the answer you're looking for in our **Help Center**, please complete our contact form at:
support.sinopetech.com/en/contact/

Our technical support team will review your request and get back to you as soon as possible.

Business hours

Monday to Friday: 8:00 a.m. to 4:30 p.m. (ET)
Saturday and Sunday: Closed

3-year Limited Warranty

SINOPÉ TECHNOLOGIES INC. warrants the components of its products against defects in materials and workmanship for a period of three (3) years from the date of purchase, upon presentation of a valid proof of purchase.

If, at any time during the warranty period, the product is found to be defective, SINOPÉ TECHNOLOGIES INC. will replace it. This warranty does not cover any transportation costs that may be incurred. It also does not cover products that have been improperly installed, misused, or accidentally damaged.

SINOPÉ TECHNOLOGIES INC.'s obligation under this warranty is limited to replacing the product, excluding installation costs or any other incidental charges related to the replacement of the product or its components. The manufacturer shall not be held liable for incidental, consequential, or special damages arising from the use or performance of the product.

SINOPÉ TECHNOLOGIES INC. does not undertake to provide replacement parts, repair services, or information necessary for the maintenance or repair of the product after the warranty period has expired.

Controlling this HomeKit-enabled accessory automatically and away from home requires a HomePod, Apple TV, or iPad set up as a home hub. It is recommended that you update to the latest software and operating system.
Use of the Works with Apple badge means that an accessory has been designed to work specifically with the technology identified in the badge and has been certified by the developer to meet Apple performance standards. Apple is not responsible for the operation of this device or its compliance with safety and regulatory standards.
HomeKit is a trademark of Apple Inc.

Sinopé® is a registered trademark of Sinopé Technologies Inc. in Canada and the United States.

Apple and the Apple logo are trademarks of Apple Inc., registered in the U.S. and other countries.
App Store is a service mark of Apple Inc., registered in the U.S. and other countries.

Google Play and the Google Play logo are trademarks of Google Inc.

The Wi-Fi CERTIFIED™ Logo is a certification mark of Wi-Fi Alliance®.

ISED Canada compliance statement

This device contains licence-exempt transmitter(s)/receiver(s) that comply with Innovation, Science and Economic Development Canada's licence-exempt RSS(s). Operation is subject to the following two conditions:

- This device may not cause interference.
- This device must accept any interference, including interference that may cause undesired operation of the device.

FCC compliance statement

This equipment has been tested and found to comply with the limits for a Class B digital device, pursuant to part 15 of the FCC Rules. These limits are designed to provide reasonable protection against harmful interference in a residential installation.

This equipment generates, uses and can radiate radio frequency energy, and if not installed and used in accordance with the instructions, may cause harmful interference to radio communications. However, there is no guarantee that interference will not occur in a particular installation.

If this equipment does cause harmful interference to radio or television reception, which can be determined by turning the equipment OFF and ON, the user is encouraged to try to correct the interference by one or more of the following measures:

- Reorient or relocate the receiving antenna.
- Increase the separation between the equipment and receiver.
- Connect the equipment into an outlet on a circuit different from that to which the receiver is connected.
- Consult the dealer or an experienced radio/TV technician for help.